Intaglio

LED strip light

MODEL: HA167288

DESIGN DRAWING

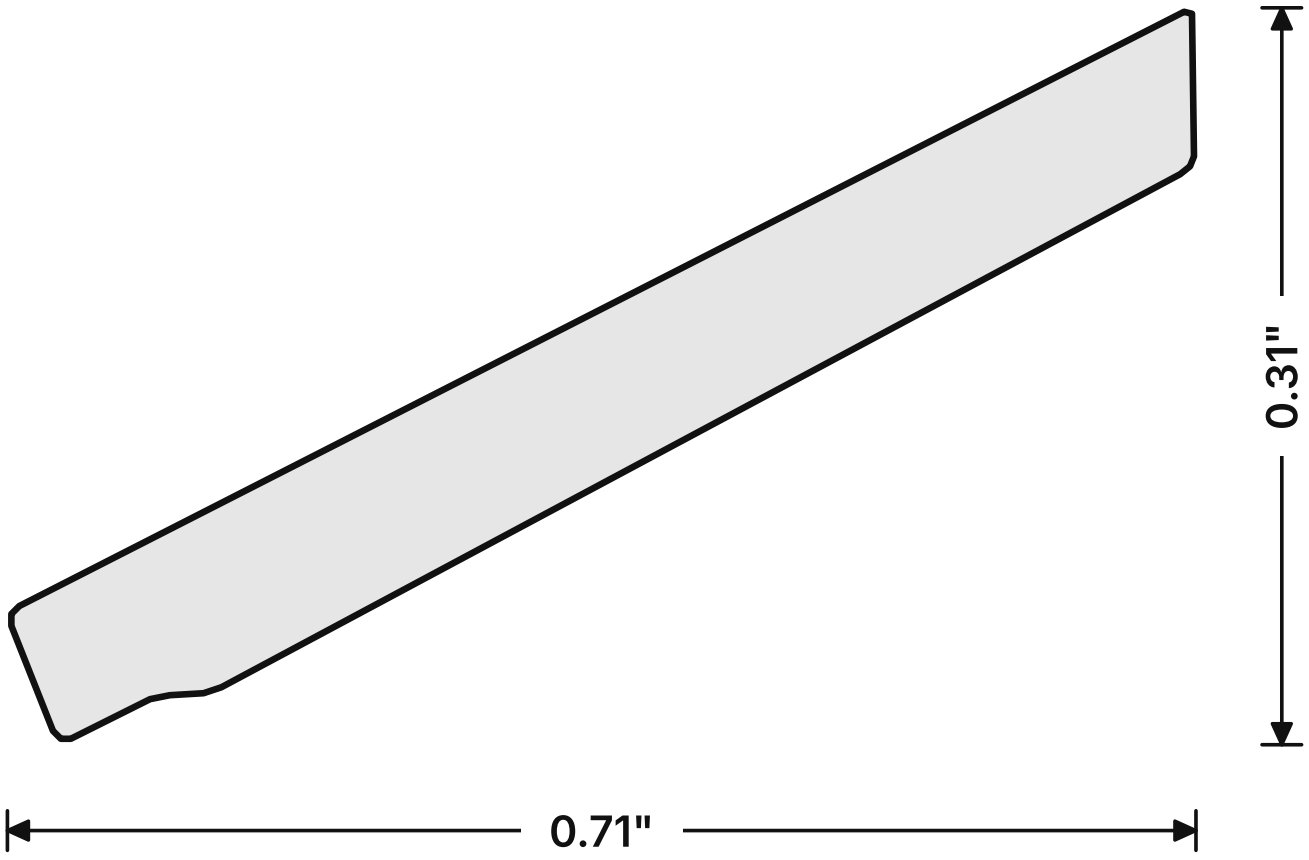

Read all instructions before you start, and keep them for future reference.

Installation precautions

1. Unplug before fitting, moving or cleaning.
2. Keep the power supply dry, indoors or under cover.

Tools needed

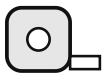
Tape measure

Clean cloth

Rubbing alcohol

Parts list

CHECK ALL PARTS BEFORE YOU START

A ×1

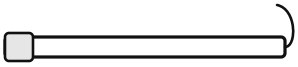

LED strip light

Exploded view

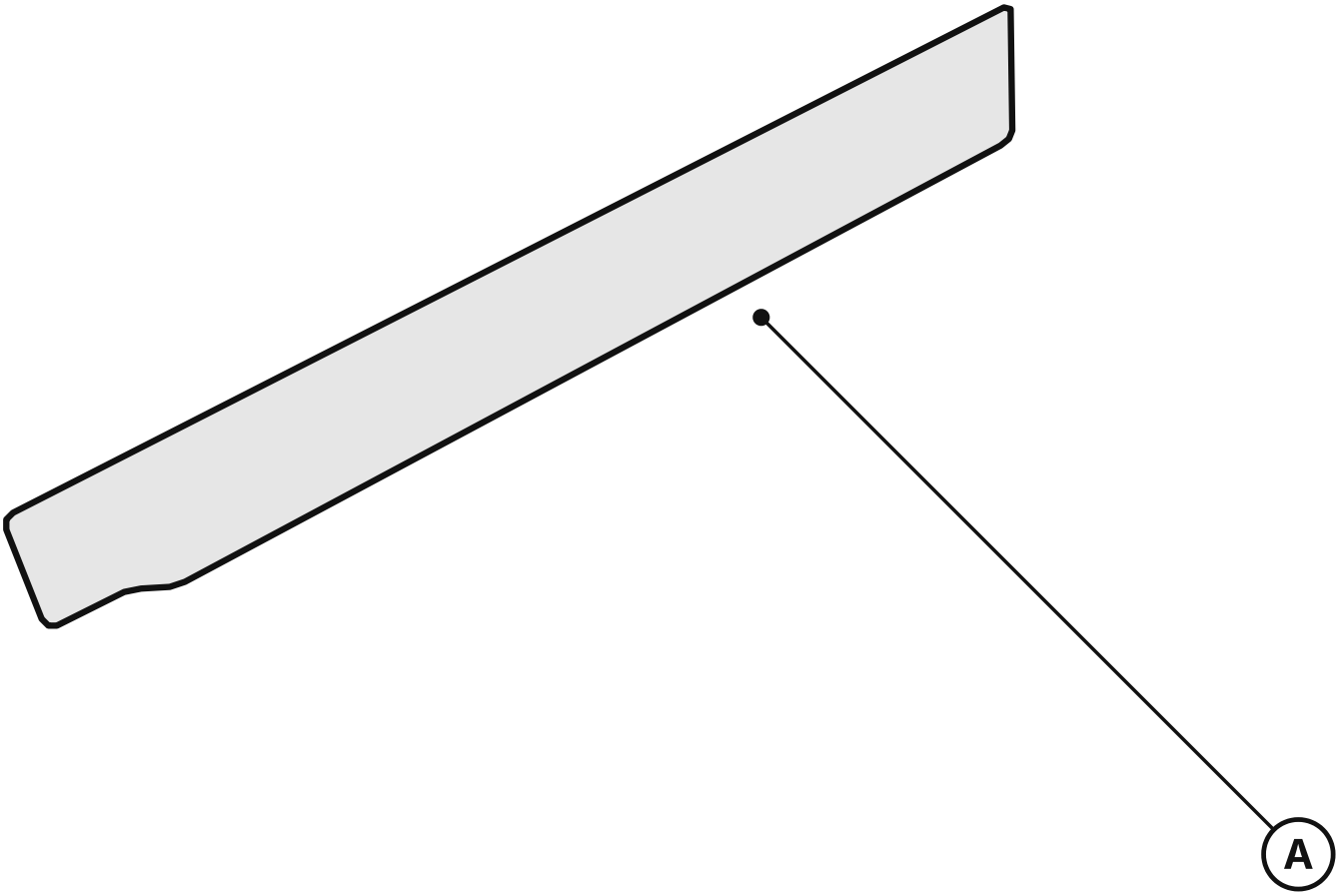

A LED strip light ×1

Installation

STEPS 1–4 OF 4

1

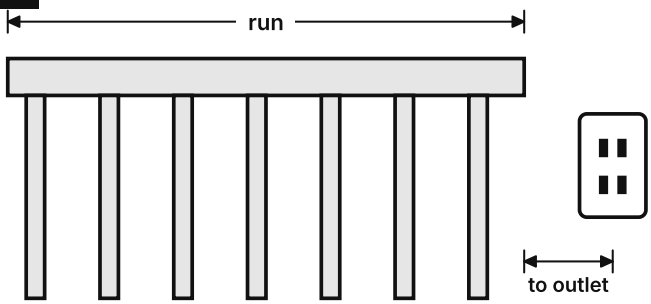

Measure where the strip will run, and the distance to the outlet.

2

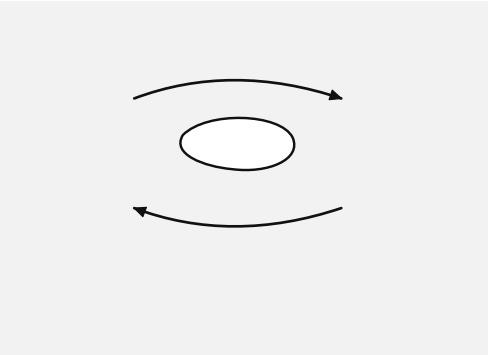

Clean and dry the surface.

3

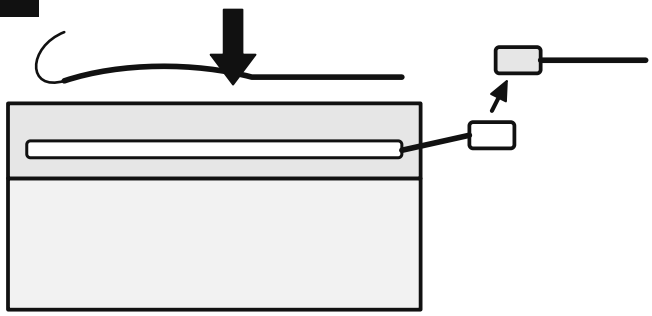

Peel the backing and press the strip (A) on firmly.

4

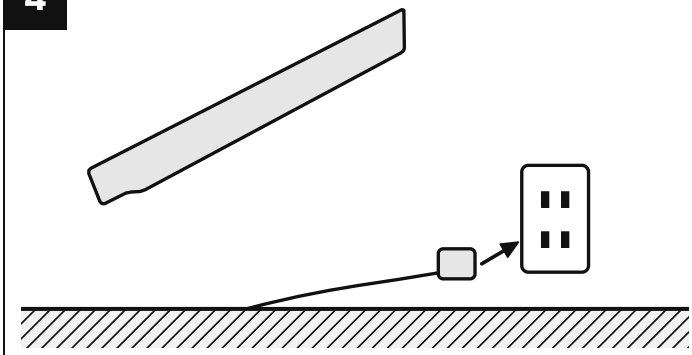

Connect the power and plug in.

Care

- Wipe clean with a soft, dry cloth.
- Dry the metal after heavy rain so the finish does not spot.
- Switch the fixture off and let it cool before cleaning.

Troubleshooting

Problem	What to do
Lights do not come on	Check the plug, the adapter and every connector.
Strip is coming loose	Clean and dry the surface again and press the strip on firmly.

Need help?
Email info@norafurnish.com with your order number and a photo. A part missing or damaged? We will send a new one.

NoraFurnish