Muntin

Outdoor wall light, hardwired or solar

MODEL: BJ3305-0

DESIGN DRAWING

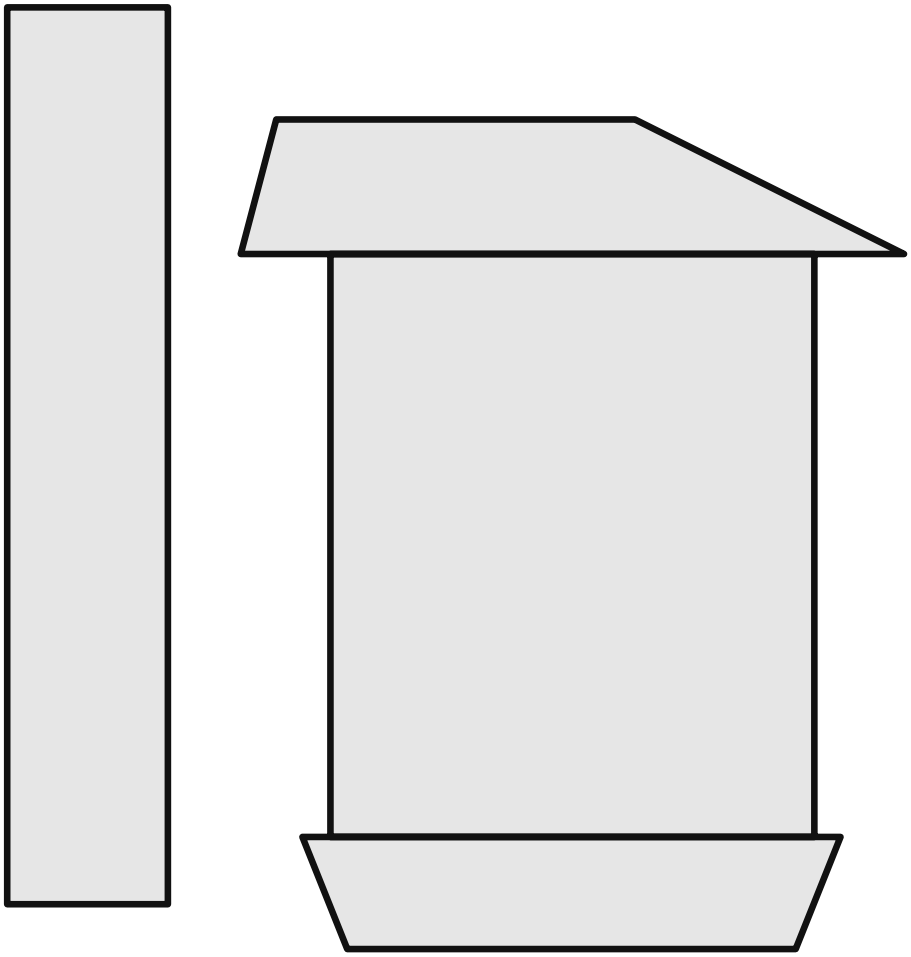

7.3 inches wide and 10.4 inches tall, or 9.1 inches wide and 12.4 inches tall; Projects 9.3 or 11.4 inches from the wall

Read all instructions before you start, and keep them for future reference.

Installation precautions

1. Turn off the power at the breaker before you start, and check the wires are dead with a voltage tester.
2. If you are not sure how to wire it, have a licensed electrician do it. Follow local electrical codes.
3. Make sure the ceiling or wall box can carry the weight of the fixture.
4. Place the panel where it gets several hours of direct sun.

Tools needed

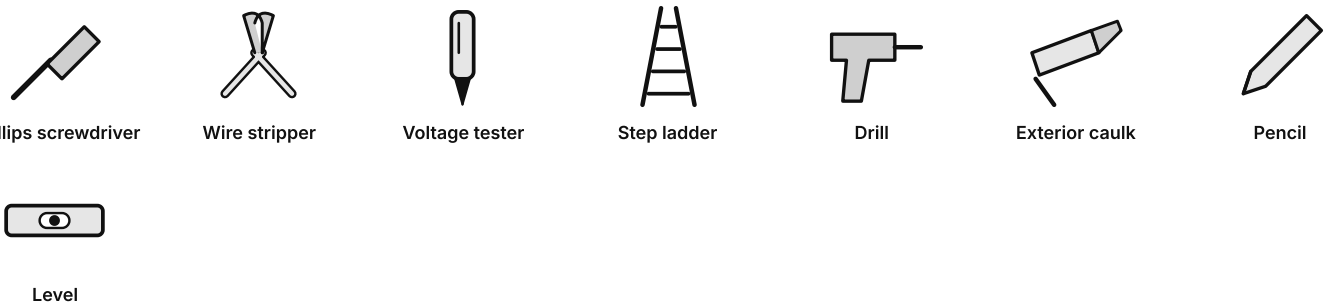

Parts list

CHECK ALL PARTS BEFORE YOU START

A ×1

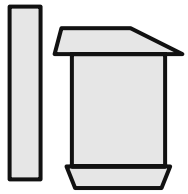

Outdoor wall light

B ×1 set

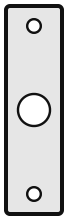

Mounting plate and screws

C ×1 set

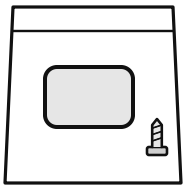

Mounting hardware (solar version)

Wiring

	Wire	House supply	Fixture
L	Live (hot)	black	black or marked wire
N	Neutral	white	white or ribbed wire
G	Ground	green or bare copper	green or green-yellow

Hardwired: Join each pair with wire connectors. Connect ground to the green screw on the bracket or plate if there is one. Solar: no wiring. The built-in panel charges the battery by day.

Exploded view

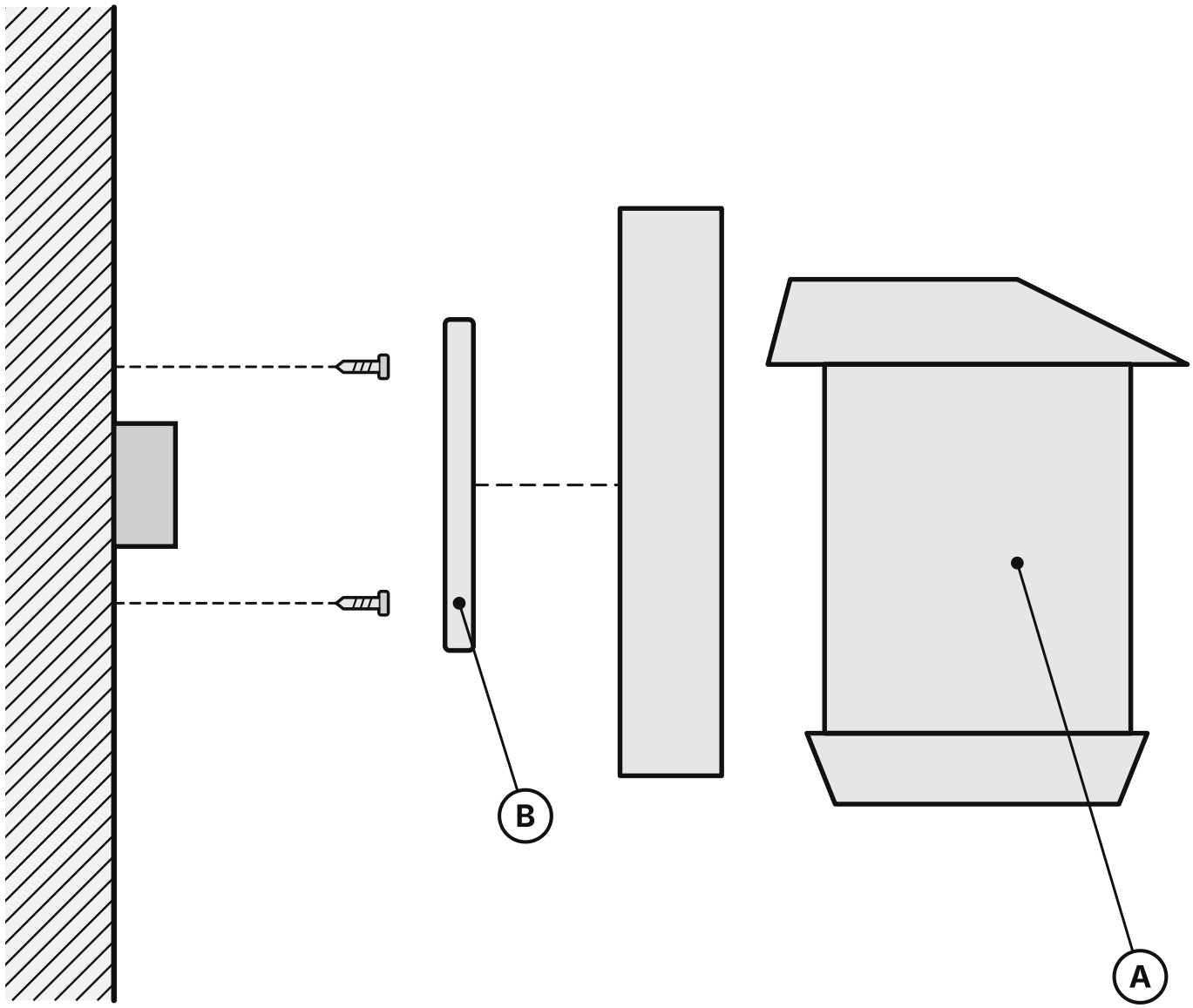

A Outdoor wall light ×1

B Mounting plate and screws ×1 set

C Mounting hardware (solar version) ×1 set

Installation

STEPS 1–6 OF 10

1

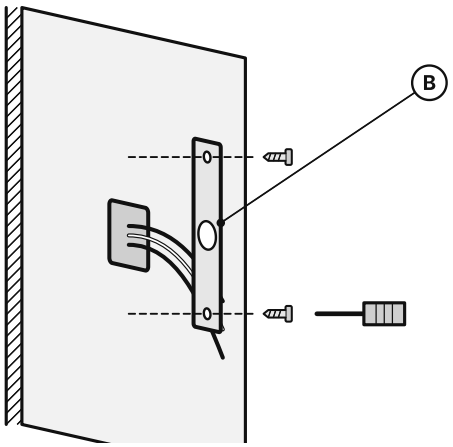

Hardwired: Fix the mounting plate (B) to the wall box with its screws.

2

House supply

- **L** **Live (hot)** black
- **N** **Neutral** white
- **G** **Ground** green or bare

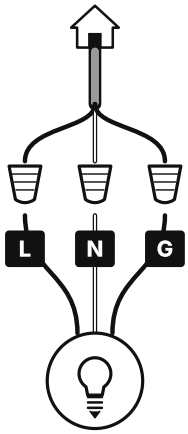

Hardwired: Connect the wires: L to L, N to N, G to G, with wire connectors.

3

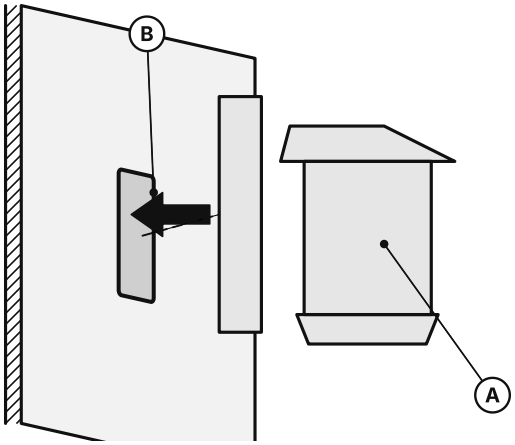

Hardwired: Fit the light (A) onto the plate and secure it.

4

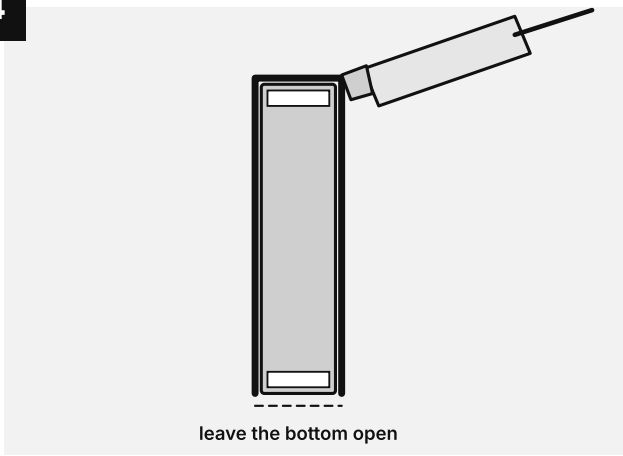

Hardwired: Seal the top and sides to the wall with exterior caulk. Leave the bottom open to drain.

5

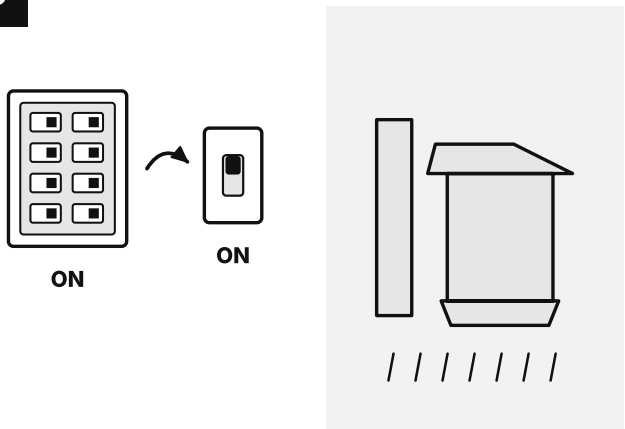

Hardwired: Turn the breaker on and switch on.

6

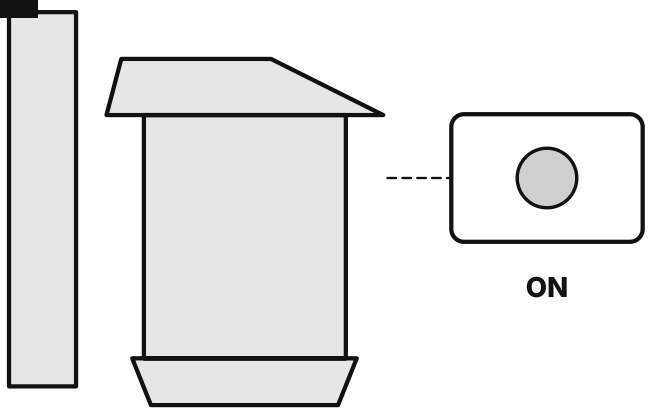

Solar: Switch the light on.

Installation

STEPS 7–10 OF 10

7

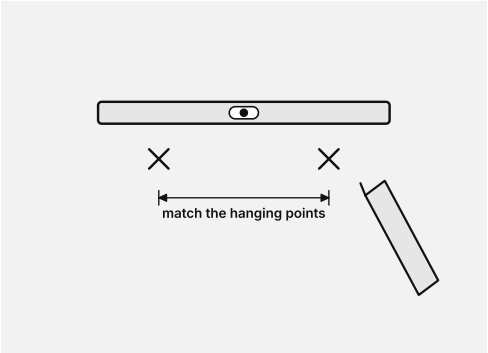

Solar: Pick a spot with several hours of direct sun. Level it and mark the holes.

8

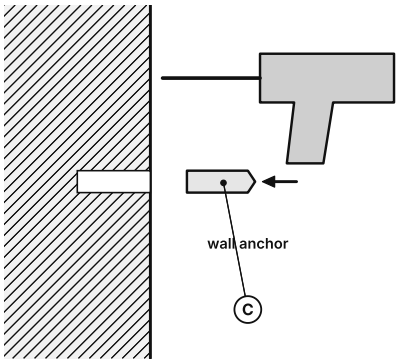

Solar: Drill the holes and push in the wall anchors.

9

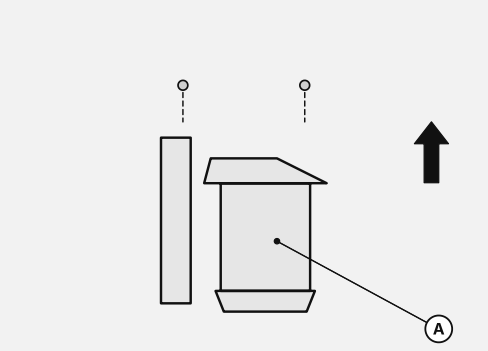

Solar: Fix the light to the wall.

10

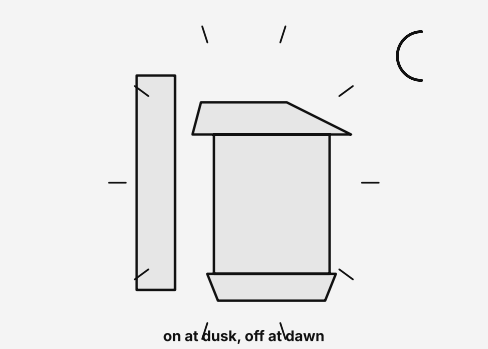

Solar: It charges by day and comes on by itself at dusk.

Care

- Wipe clean with a soft, dry cloth.
- Avoid harsh or abrasive cleaners on the aluminum and dry it fully after cleaning.
- For the glass, put glass cleaner on the cloth, never sprayed on the fixture.

Troubleshooting

Problem	What to do
Light does not come on	Check the breaker and wall switch. Turn the power off and check each wire connection is tight.
Light flickers	Turn the power off and re-make the connections. On a dimmable model, use an LED-rated dimmer.
Short run time	Clean the panel and move it out of shade. Run time drops on cloudy days.

Need help?
Email info@norafurnish.com with your order number and a photo. A part missing or damaged? We will send a new one.

NoraFurnish