Halcyon

Pendant light

MODEL: LI003121

DESIGN DRAWING

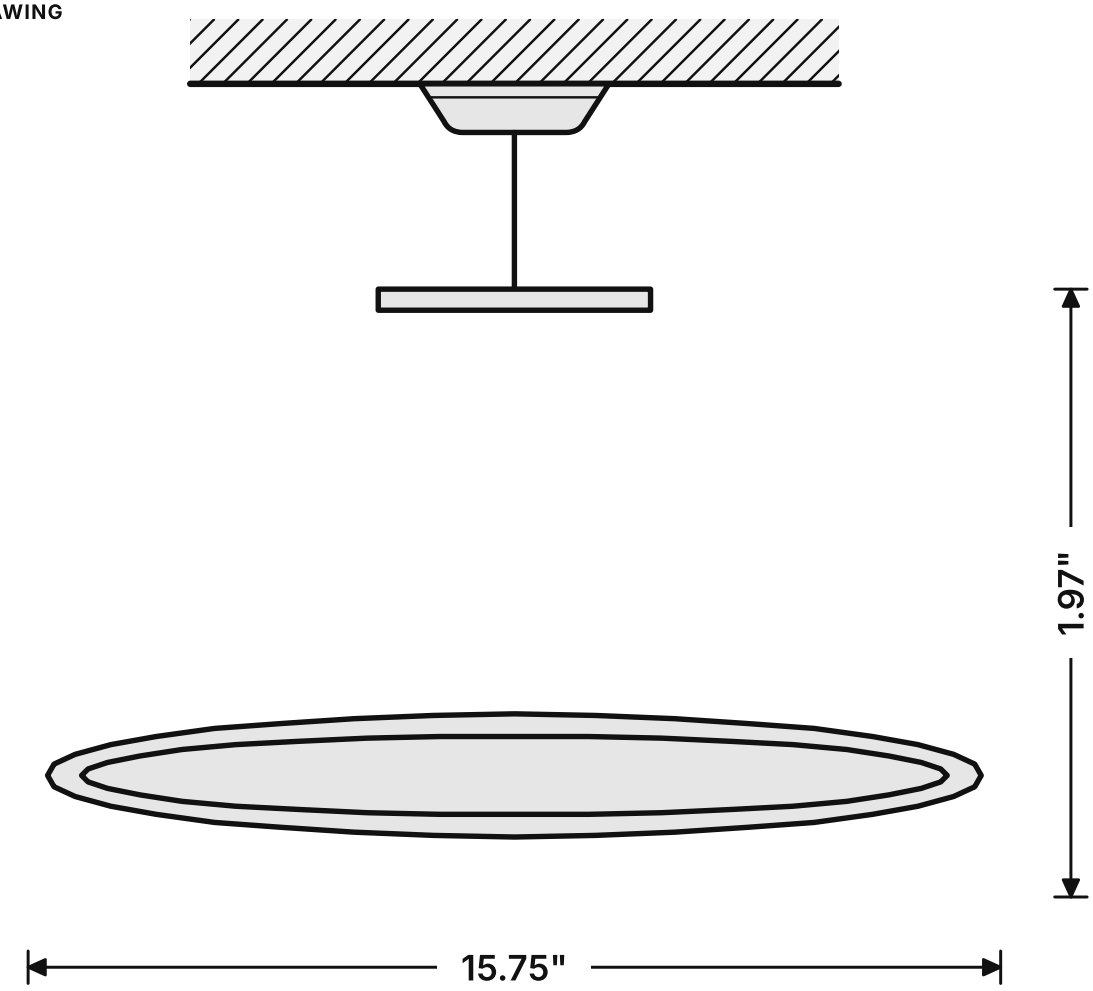

Shown: 15.7"

Read all instructions before you start, and keep them for future reference.

Installation precautions

1. Turn off the power at the breaker before you start, and check the wires are dead with a voltage tester.
2. If you are not sure how to wire it, have a licensed electrician do it. Follow local electrical codes.
3. Make sure the ceiling or wall box can carry the weight of the fixture.
4. Wear gloves so the finish stays clean.

Tools needed

Phillips screwdriver

Wire stripper

Voltage tester

Step ladder

Parts list

CHECK ALL PARTS BEFORE YOU START

A ×1

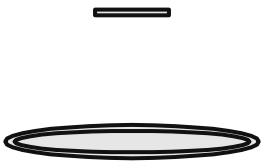
Pendant light with canopy

B ×1

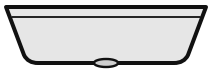
Canopy

C ×1 set

Mounting bracket and screws

Wiring

	Wire	House supply	Fixture
L	Live (hot)	black	black or marked wire
N	Neutral	white	white or ribbed wire
G	Ground	green or bare copper	green or green-yellow

Join each pair with wire connectors. Connect ground to the green screw on the bracket or plate if there is one.

Exploded view

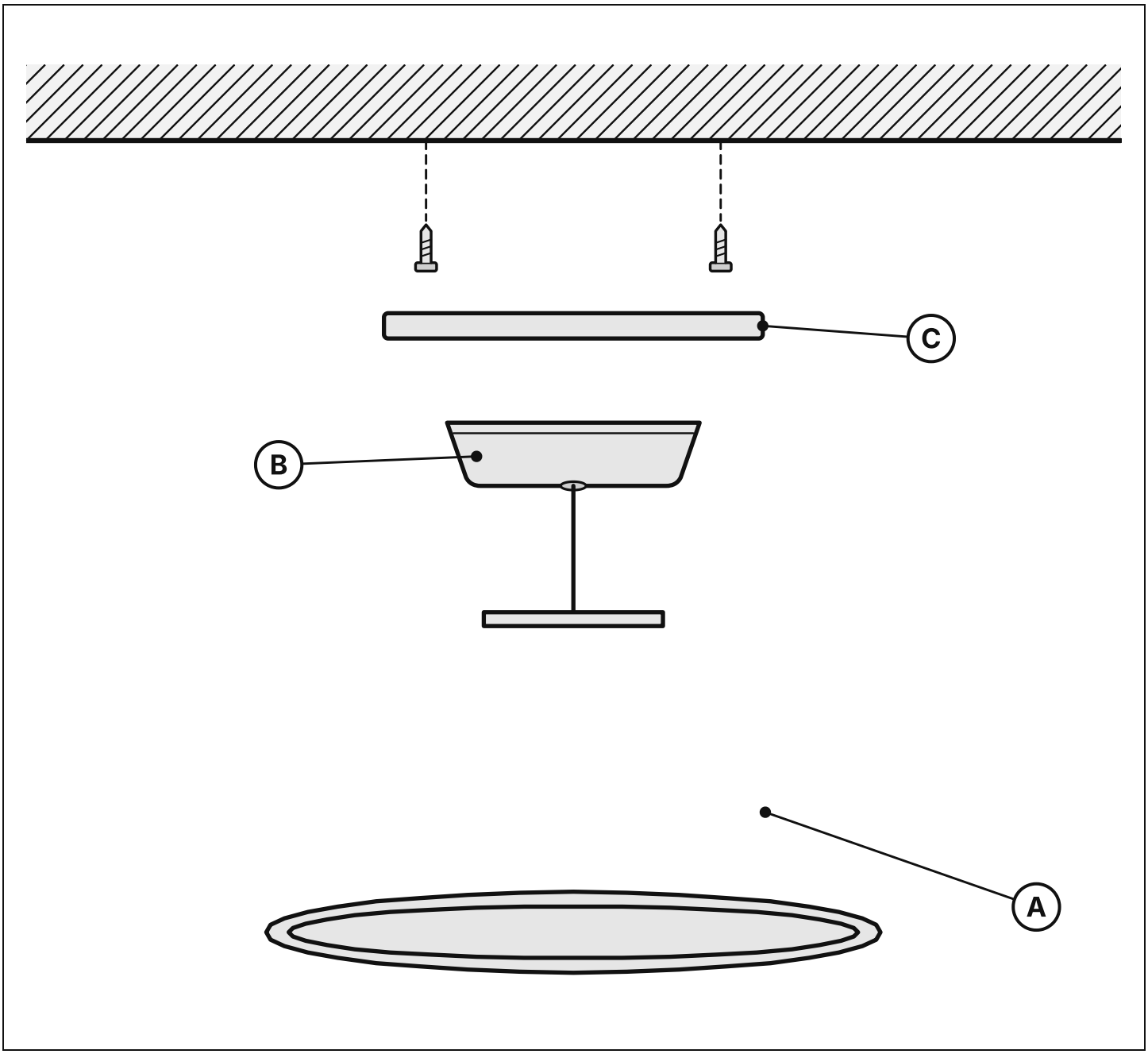

A Pendant light with canopy ×1

B Canopy ×1

C Mounting bracket and screws ×1 set

Size	Diameter	Height
15.7"	15.75"	1.97"
19.7"	19.69"	1.97"
23.6"	23.62"	1.97"
27.6"	27.56"	1.97"
31.5"	31.5"	1.97"
35.4"	35.43"	1.97"
39.4"	39.37"	1.97"

Installation

STEPS 1–5 OF 5

1

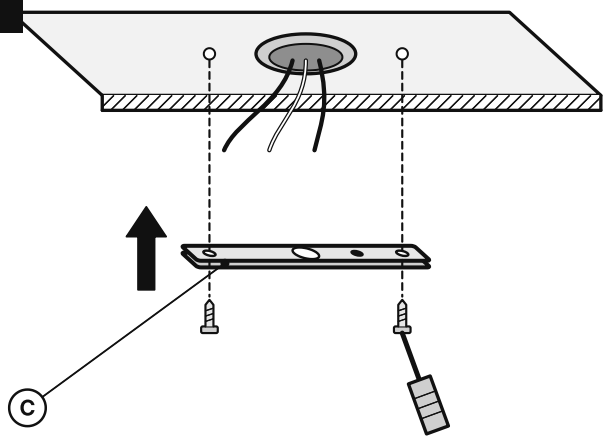

Fix the mounting bracket (C) to the ceiling box with its screws.

2

House supply

- **L** **Live (hot)** black
- **N** **Neutral** white
- **G** **Ground** green or bare

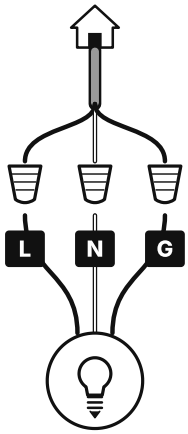

Connect the wires: L to L, N to N, G to G, with wire connectors.

3

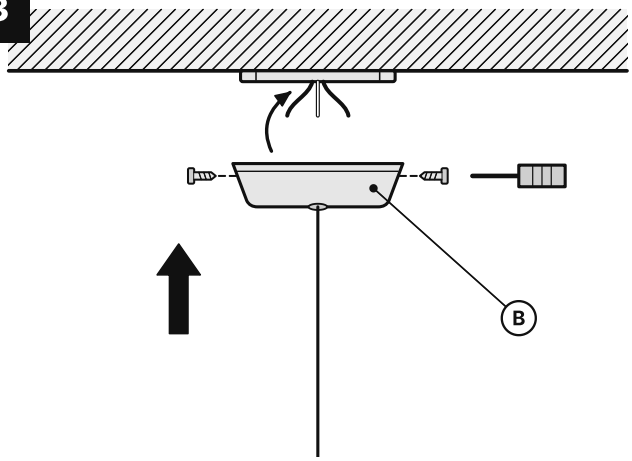

Tuck the wires into the box and fix the canopy (B) to the bracket.

4

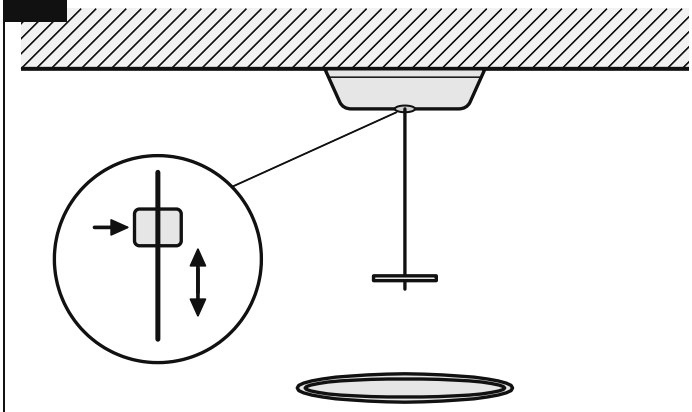

Set the hanging height at the canopy before the final tightening.

5

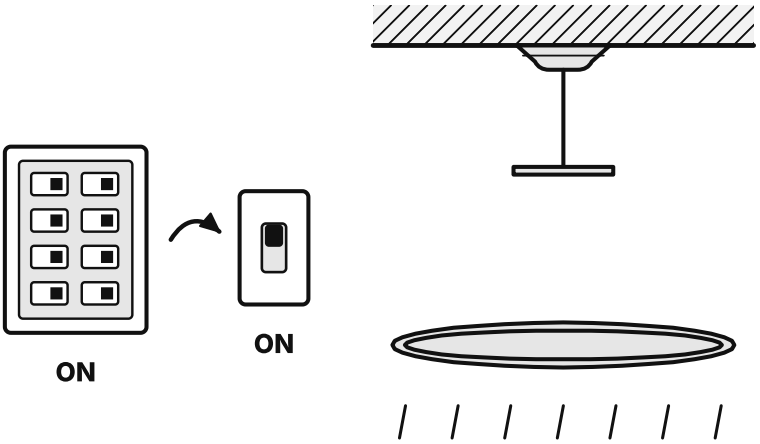

Turn the breaker on and switch on at the wall. Dimmable models need an LED-rated dimmer.

Care

- Wipe clean with a soft, dry cloth.
- Clean glass or acrylic with a soft damp cloth and dry it straight away.
- Do not use abrasive cleaners.

Troubleshooting

Problem	What to do
Light does not come on	Check the breaker and wall switch. Turn the power off and check each wire connection is tight.
Light flickers	Turn the power off and re-make the connections. On a dimmable model, use an LED-rated dimmer.
Fixture hangs crooked	Adjust the cord, chain or cables until it hangs level.

Need help?
Email info@norafurnish.com with your order number and a photo. A part missing or damaged? We will send a new one.

NoraFurnish