Plaza

Outdoor wall light

MODEL: LI000567

DESIGN DRAWING

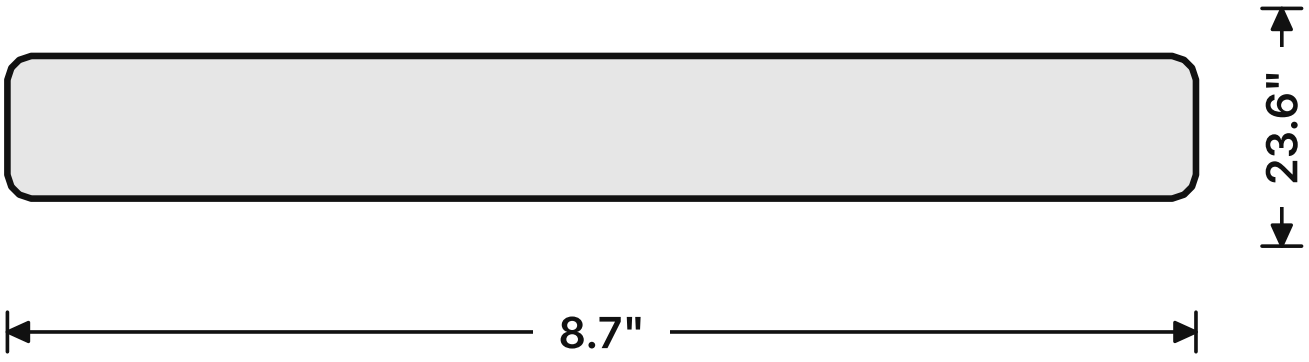

Shown: 24"

Read all instructions before you start, and keep them for future reference.

Installation precautions

1. Turn off the power at the breaker before you start, and check the wires are dead with a voltage tester.
2. If you are not sure how to wire it, have a licensed electrician do it. Follow local electrical codes.
3. Make sure the ceiling or wall box can carry the weight of the fixture.
4. For outdoor use, keep every connection inside a weatherproof box.

Tools needed

Phillips screwdriver | Wire stripper | Voltage tester | Step ladder | Drill | Exterior caulk

Parts list

CHECK ALL PARTS BEFORE YOU START

A ×1

Outdoor wall light

B ×1 set

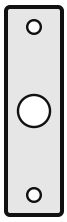

Mounting plate and screws

Wiring

	Wire	House supply	Fixture
L	Live (hot)	black	black or marked wire
N	Neutral	white	white or ribbed wire
G	Ground	green or bare copper	green or green-yellow

Join each pair with wire connectors. Connect ground to the green screw on the bracket or plate if there is one.

Exploded view

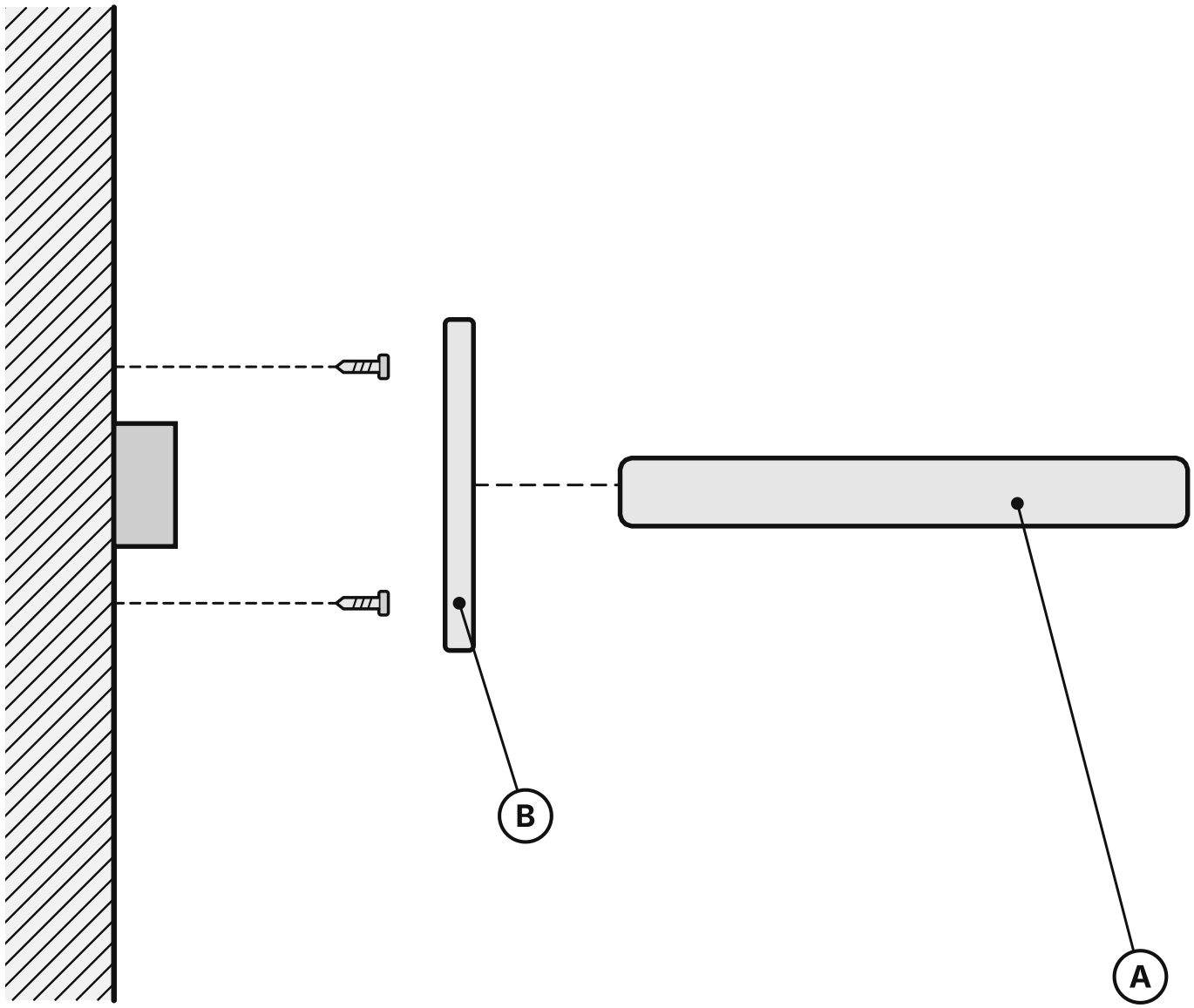

A Outdoor wall light ×1

B Mounting plate and screws ×1 set

Size	Width	Depth	Height
24"	8.7"	2.1"	23.6"
35"	8.7"	2.1"	35.4"
47"	8.7"	2.1"	47.2"

Installation

STEPS 1–5 OF 5

1

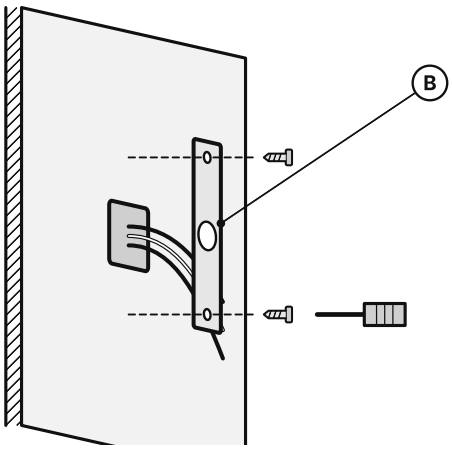

Fix the mounting plate (B) to the wall box with its screws.

2

House supply

- **L** **Live (hot)** black
- **N** **Neutral** white
- **G** **Ground** green or bare

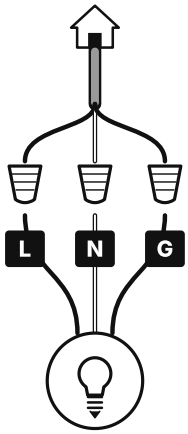

Connect the wires: L to L, N to N, G to G, with wire connectors.

3

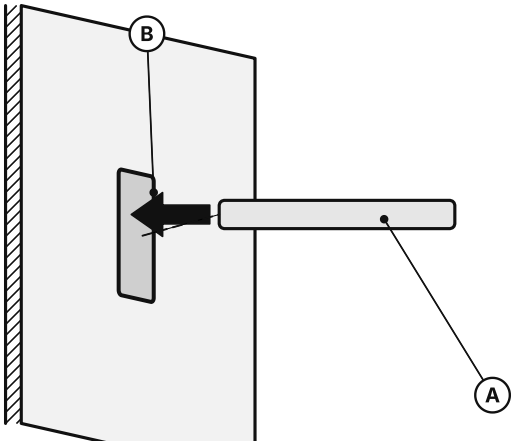

Fit the light (A) onto the plate and secure it.

4

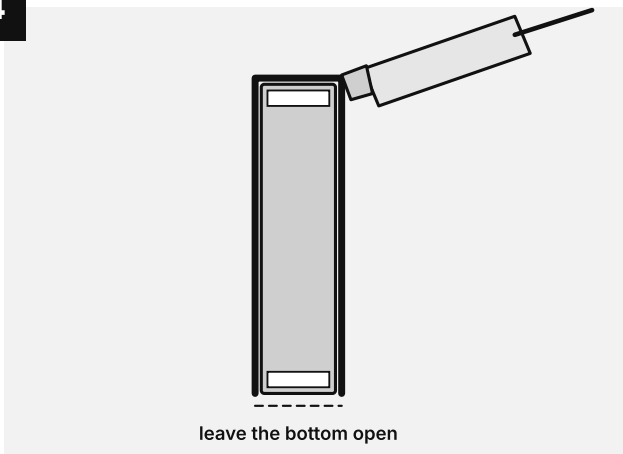

Seal the top and sides to the wall with exterior caulk. Leave the bottom open to drain.

5

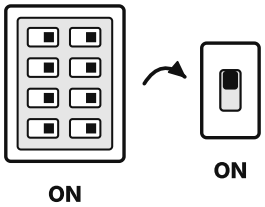

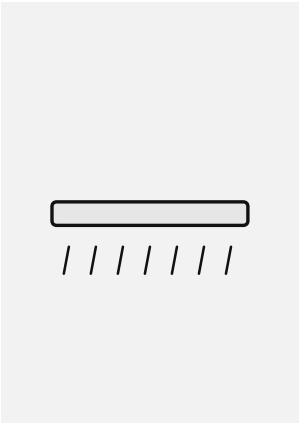

Turn the breaker on and switch on.

Care

- Wipe clean with a soft, dry cloth.
- Dry the housing immediately if it gets wet so the finish is not marked, and do not use abrasive pads on it.
- This fixture is hardwired, so always turn off power at the breaker before cleaning or handling it.

Troubleshooting

Problem	What to do
Light does not come on	Check the breaker and wall switch. Turn the power off and check each wire connection is tight.
Light flickers	Turn the power off and re-make the connections. On a dimmable model, use an LED-rated dimmer.
Fixture sits crooked	Loosen the mounting screws, level the bracket and retighten.

Need help?
Email info@norafurnish.com with your order number and a photo. A part missing or damaged? We will send a new one.

NoraFurnish