Kiri

Linear pendant light

MODEL: NF43965740

DESIGN DRAWING

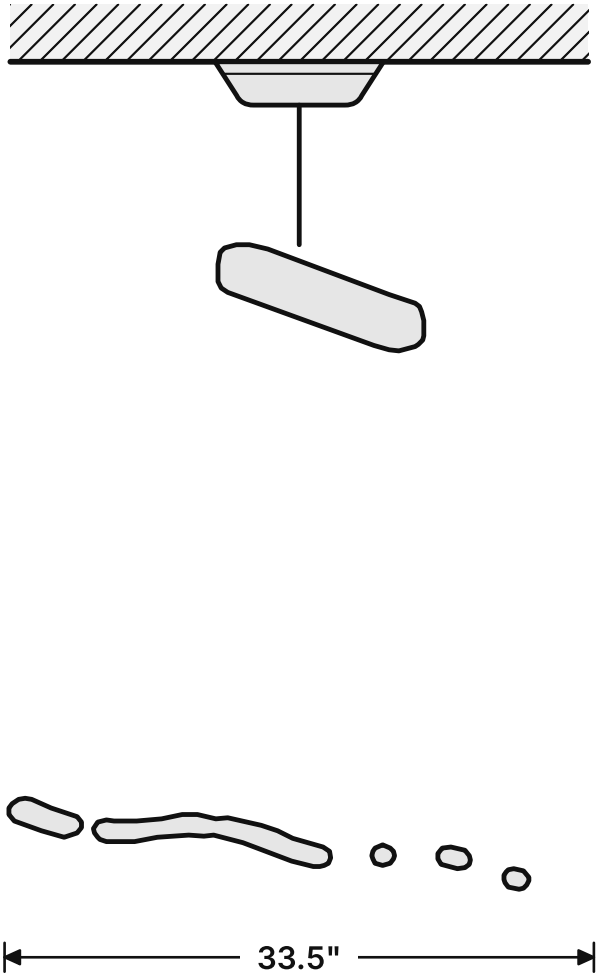

Shown: 33.5"

Read all instructions before you start, and keep them for future reference.

Installation precautions

1. Turn off the power at the breaker before you start, and check the wires are dead with a voltage tester.
2. If you are not sure how to wire it, have a licensed electrician do it. Follow local electrical codes.
3. Make sure the ceiling or wall box can carry the weight of the fixture.
4. Wear gloves so the finish stays clean.

Tools needed

Phillips screwdriver | Wire stripper | Voltage tester | Step ladder

Parts list

CHECK ALL PARTS BEFORE YOU START

A ×1

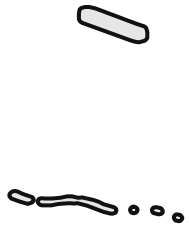

Linear pendant with canopy

B ×1

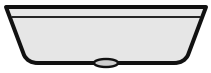

Canopy

C ×1 set

Mounting bracket and screws

D ×1

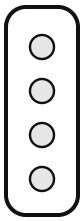

Remote control

Wiring

	Wire	House supply	Fixture
L	Live (hot)	black	black or marked wire
N	Neutral	white	white or ribbed wire
G	Ground	green or bare copper	green or green-yellow

Join each pair with wire connectors. Connect ground to the green screw on the bracket or plate if there is one.

Exploded view

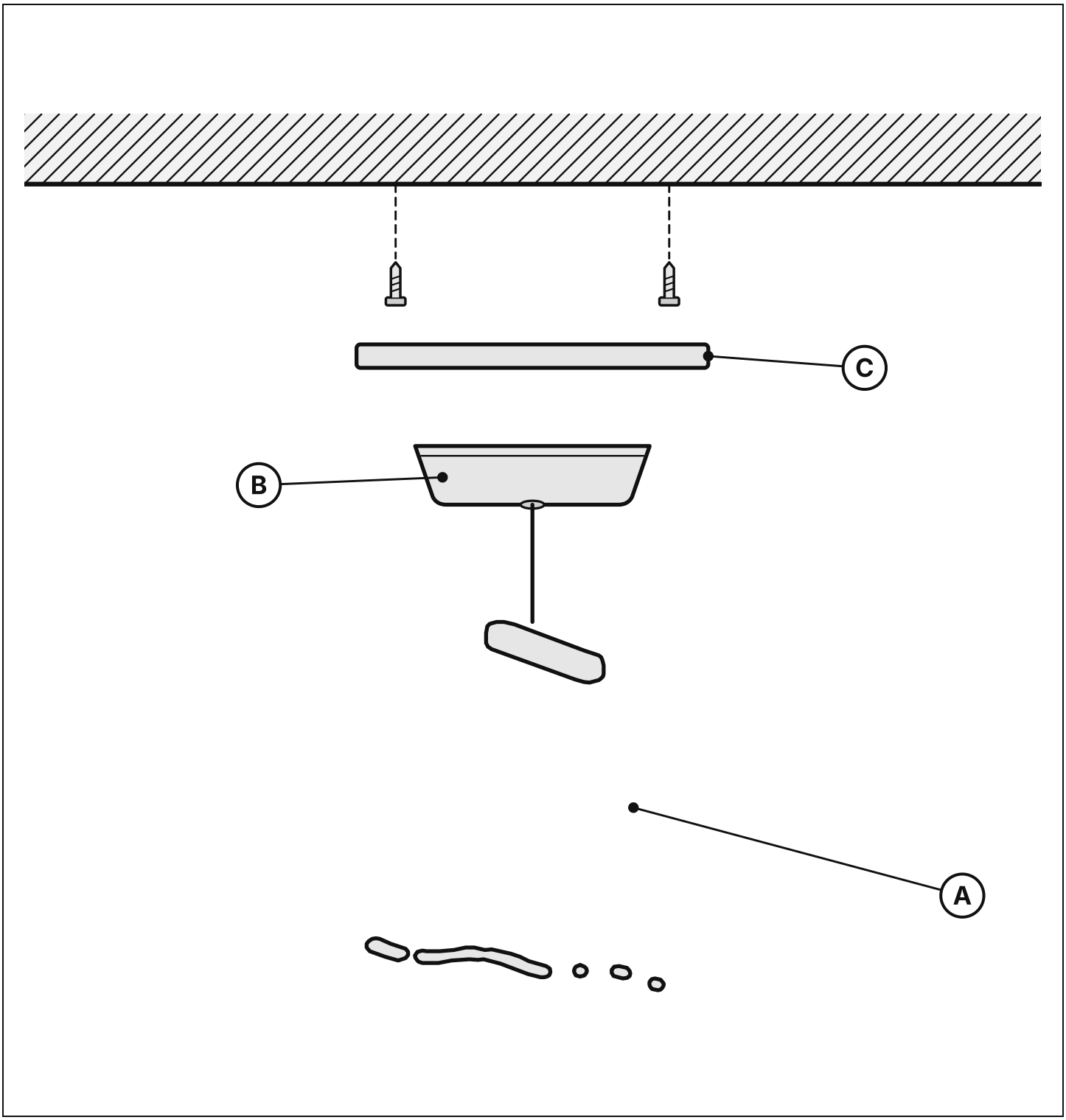

- **A** Linear pendant with canopy ×1
- **B** Canopy ×1
- **C** Mounting bracket and screws ×1 set
- **D** Remote control ×1

Size	Width	Depth
33.5"	33.5"	3.9"
49.2"	49.2"	3.9"

Installation

STEPS 1–5 OF 5

1

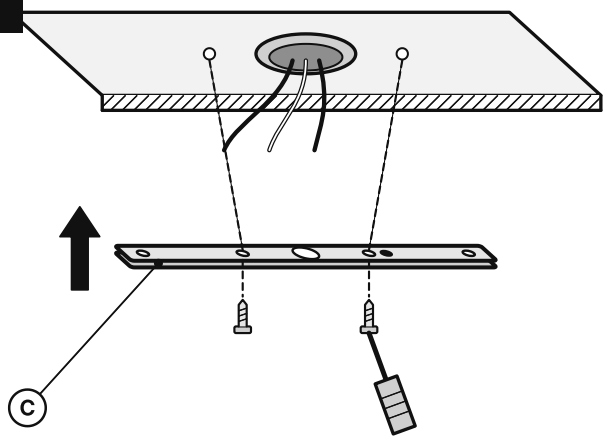

Fix the mounting bracket (C) to the ceiling box with its screws.

2

House supply

- **L** **Live (hot)** black
- **N** **Neutral** white
- **G** **Ground** green or bare

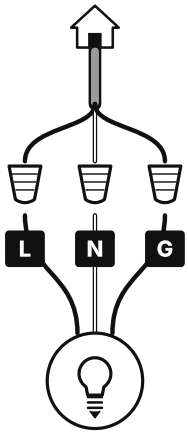

Connect the wires: L to L, N to N, G to G, with wire connectors.

3

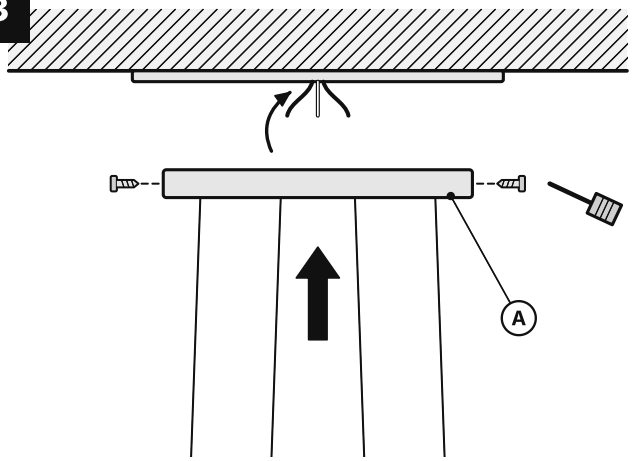

Tuck the wires into the box and fix the canopy (B) to the bracket.

4

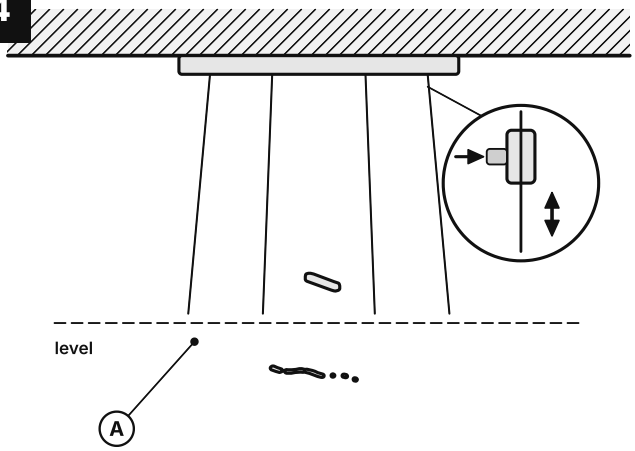

Adjust each cable to set the height. Keep the light level.

5

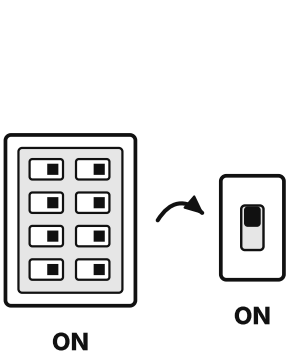

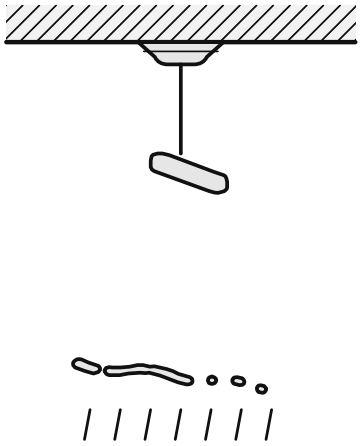

Turn the breaker on and switch on at the wall. Dimmable models need an LED-rated dimmer.

Care

- Wipe clean with a soft, dry cloth.
- Switch off the power and let the fixture cool before cleaning, and dry the iron right away if it gets damp.

Troubleshooting

Problem	What to do
Light does not come on	Check the breaker and wall switch. Turn the power off and check each wire connection is tight.
Light flickers	Turn the power off and re-make the connections. On a dimmable model, use an LED-rated dimmer.
Fixture hangs crooked	Adjust the cord, chain or cables until it hangs level.

Need help?
Email info@norafurnish.com with your order number and a photo. A part missing or damaged? We will send a new one.

NoraFurnish